VidoNet

12MP IR Water-Proof
Fisheye Network Camera

VTC-F1200

12MP IR Water-Proof
Fisheye Network Camera



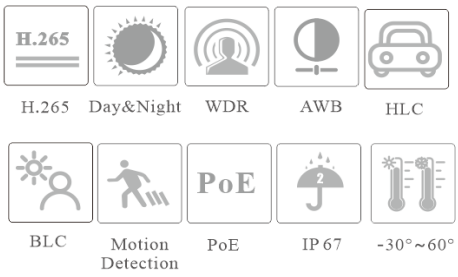

- 1:1 (3000×3000) @30fps
- H.265+ / H.265/ H.264+ / H.264 MJPEG coding
- ICR auto switch, true day & night
- 10~20m IR view distance
- Support 3D DNR, digital WDR, BLC, HLC, Smart IR, Defog, etc.
- Support ROI
- Built-in micro SD card slot, up to 256GB
- IP 67 ingress protection
- Intelligent Analytics
- Support P2P function
- Support mobile surveillance by smart phones with iOS and Android OS

Specifications

Model	VTC-F1200
Camera	
Image Sensor	1/1.7" Progressive Scan CMOS
Max. Resolution	4000×3000
Electronic Shutter	1/3s ~ 1/100000s
Min. Illumination	0.01 lux@F2.0, AGC ON; 0 lux with IR
IRIS	Fixed IRIS
Lens	1.65mm @F2.0, horizontal field of view : 180°（wall mounting），360° （ceiling mounting），360°（desktop）
WDR	Digital WDR
S/N Ratio	≥ 50dB
BLC	Yes
HLC	Yes
Digital NR	3D NR
Image	
Video Compression	Main stream: H.265+ / H.265/ H.264+ / H.264 Sub stream: H.265+ / H.265/ H.264+ / H.264 MJPEG
H.264 Compression Standard	Baseline Profile/Main Profile/High Profile
Main Stream	Mode1: Fisheye Fisheye view (main stream): 3000×3000/2160×2160/1080×1080 (50Hz: 1~25fps; 60Hz: 1~30fps) Fisheye view (sub stream): 1440×1440/720×720/480×480 (50Hz: 1~25fps; 60Hz: 1~30fps) Fisheye view (third stream): 960×960/ 640×640/360×360(50Hz: 1~25fps; 60Hz: 1~30fps) Mode2: Panoramic Panoramic view (main stream): 4000×3000/3840×2160/3200×1800/2560×1440 (50Hz:1~20fps; 60Hz:1~20fps) Panoramic view (sub stream): 1920×1080/ 960×540/640×480 (50Hz:1~20fps; 60Hz:1~20fps) Panoramic view (third stream): 1280×720/640×360 (50Hz:1~20fps; 60Hz:1~20fps) Mode 3: Fisheye+Panoramic+3 PTZ Fisheye view (main stream): 3000×3000/2160×2160/1080×1080 (50Hz: 1~15fps; 60Hz:1~15fps) Fisheye view (sub stream): 1440×1440/720×720/480×480 (50Hz: 1~15fps; 60Hz:1~15fps) Fisheye view (third stream): 960×960/ 640×640/360×360 (50Hz: 1~15fps; 60Hz:1~15fps) Panoramic view (main stream): 4000×3000/3840×2160/3200×1800/2560×1440 (50Hz:1~10fps; 60Hz: 1~10fps) Panoramic view (sub stream): 1920×1080/ 960×540/640×480 (50Hz:1~10fps; 60Hz: 1~10fps) Panoramic view (third stream): 1280×720/640×360(50Hz:1~10fps; 60Hz: 1~10fps) 3PTZ view: (1280×720) * 3 (50Hz:1~15fps; 60Hz: 1~15fps) Mode 4：Fisheye+ 4 PTZ Fisheye view (main stream): 3000×3000/2160×2160/1080×1080 (50Hz: 1~25fps; 60Hz:1~30fps) Fisheye view (sub stream): 1440×1440/720×720/480×480 (50Hz: 1~25fps; 60Hz:1~30fps) Fisheye view (third stream): 960×960/ 640×640/360×360 (50Hz: 1~25fps; 60Hz:1~30fps) 4PTZ view : (1280×720) * 4 (50Hz:1~15fps; 60Hz: 1~15fps) Mode5：Fisheye+ 4 PTZ Fusion Fisheye view (main stream): 3000×3000/2160×2160/1080×1080 (50Hz: 1~25fps; 60Hz:1~30fps) Fisheye view (sub stream): 1440×1440/720×720/480×480 (50Hz: 1~25fps; 60Hz:1~30fps) Fisheye view (third stream): 960×960/ 640×640/360×360 (50Hz: 1~25fps; 60Hz:1~30fps) 4PTZ fusion view (main stream): 2560×1440 (50Hz:1~20fps; 60Hz: 1~20fps) 4PTZ fusion view (sub stream): 640×360 (50Hz:1~20fps; 60Hz: 1~20fps)

*All pictures and specifications are for reference only and are subject to change without prior notice

	4PTZ fusion view (third stream): 640×360 (50Hz:1~20fps; 60Hz: 1~20fps)
Bit Rate	128Kbps ~ 16Mbps
Bit Rate Type	VBR/CBR
Audio Compression	G711A / U
Image Settings	ROI, Saturation, Brightness, Hue, Contrast, Wide Dynamic, Sharpness, Image Flip, Image Mirror, NR, etc. adjustable through client software or web browser
ROI	Each ROI to be configured separately
Interfaces	
Network	1 CH RJ45 10 M/100 M self-adaptive Ethernet port
Video Output	CVBS (BNC × 1)
Audio	2CH Built-in MIC, 1 CH audio input, 1CH audio output
RS-485	Yes, half-duplex
Storage	Built-in micro SD card slot, up to 256GB
Reset	Yes
Alarm	1CH alarm input, 1CH alarm output
Functions	
Remote Monitoring	Web Browser/ NVMS2.0/NVR/mobile APP
Web Browser	IE11(plug-in required)/Chrome 89.0+/Edge 89.0+/Firefox 87.0+/Safari 14.0+
Online Connection	Support simultaneous monitoring for up to 6 users; Support multi-stream real time transmission
Network Protocol	UDP, IPv4, IPv6, DHCP, NTP, RTSP, RTP, RTCP, RTMP, SNMP, PPPoE, DDNS, 802.1x, SMTP, FTP, UPnP, HTTPs, HTTP, QoS, P2P, HTTP POST
Interface Protocol	ONVIF
Intelligent Analytics	Mode 1/3/4/5 (ceiling mounting): (Human) region intrusion/region entrance/region exiting/line crossing/target counting by line, crowd density detection, heat map Mode 2/3 (Wall mounting or desktop): Region intrusion/region entrance/region exiting/line crossing/target counting by line (human/motor vehicle/non-motor vehicle classification), crowd density detection
Smart Alarm	Motion detection, sensor alarm, SD card error, SD card full, IP address conflict, cable disconnection
General function	Watermark, video mask, heartbeat, corridor pattern, fisheye dewarping, system backup
PoE	Yes, IEEE802.3af
IR Distance	10-20m
Ingress Protection	IP67
General	
Power Supply	DC12V/PoE
Power Consumption	<10.5W
Working Environment	-30℃ to 60 ℃ (-22 ℉ to 140 ℉). Humidity 95% or less (non-condensing)
Dimensions(mm)	ϕ130.6×46.3
Weight (net)	Approx. 516.2g
Installation	Wall mounting, ceiling mounting, desktop
Certificate	CE, FCC, UKCA
Environment Protection	Complies with Directive EU RoHS, WEEE(2012/19/EU) , directive 94/62/EC and REACH(EC1907/2006)

*All pictures and specifications are for reference only and are subject to change without prior notice

Available Model

Available Model	VTC-F1200

Available Model

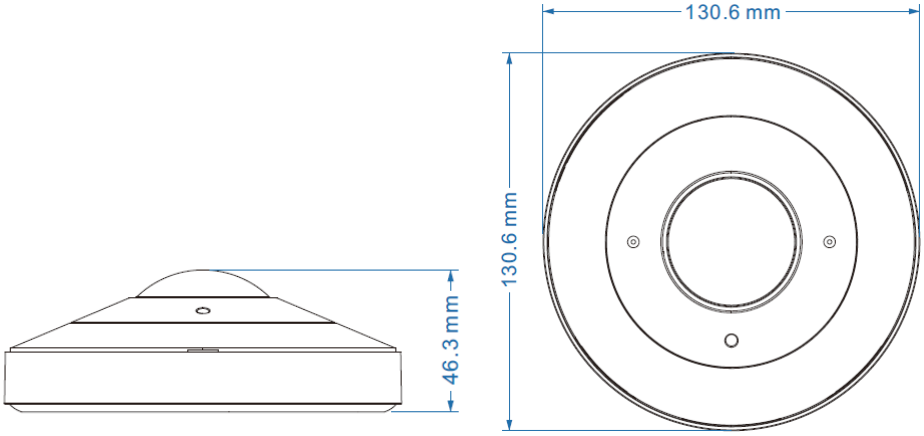

Available Accessories



VTC-YXH0206 VTC-YZJ0409 VTC-YZJ0813